2360 Boswell Road
Chula Vista, CA 91914
Phone 619.216.1444
Fax 619.216.1474
E-Mail tech@explorerprocomp.com

PRO COMP SUSPENSION

Suspension Systems that Work!

IMPORTANT!: 18" OR LARGER WHEELS WITH 4 3/4" MAXIMUM BACKSPACING MUST BE USED IN CONJUNCTION WITH THIS LIFT KIT!

IMPORTANT! This vehicle is not for use in 4WD over 50mph. If this vehicle will be used at speeds in 4WD over 50 mph a Pro Comp CV style front driveshaft PN#57098 will need to be purchased separately and installed

NOTE: For vehicles experiencing driveline vibration that cannot be corrected by the supplied spacers, transmission crossmember kit (57091 sold separately) can be purchased and installed to correct the problem.

Part #57396/57396MX
2007-2009
TOYOTA TACOMA
4WD/2WD Pre Runner
w/ Vehicle Stability Control

This document contains very important information that includes warranty information and instructions for resolving problems you may encounter. Please keep it in the vehicle as a permanent record.

Box 1 of 5-PN 57396/57396MX-1

Part #	Description	Qty.	Illus.	Page
90-6439	**HARDWARE PACK: Tie Rod Jam Nut**	**1**	**-**	**-**
.160FNFJZ	16mm-1.5 PLATED NUT	2	-	-
90-3327	**FRONT CROSSMEMBER**	**1**	**3,7,10**	**9,11,13**
90-3333	**FRONT CROSSMEMBER NUT PLATE**	**1**	**10**	**13**
90-6440	**HARDWARE PACK: Differential**	**1**	**-**	**-**
70-0503251800	1/2” x 3 3/4” GR. 8 HEX BOLT	1	6	11
70-0504001800	1/2” x 4” GR. 8 HEX BOLT	3	6,7	11
72-050100816	1/2” GR. 8 STOVER NUT	4	6,7	11
73-0500083	1/2” SAE GR. 8 FLAT WASHER	8	6,7	11
71-120901501000	12mm-1.5 X 90mm GR. 10.9 HEX BOLT	1	4	10
72-12150816	12mm-1.5 NYLOCK NUT	1	4	10
73-01208840	12mm FLAT WASHER	2	4	10
73-01400834	14mm HARDENED FLAT WASHER	2	4	10
71-140401501000	14mm-1.5 X 30mm HEX BOLT 10.9	2	4	10
90-6441	**HARDWARE PACK: Bump Stop**	**1**	**-**	**-**
71-100301251000	10mm-1.25 X 30mm GR. 10.9 HEX BOLT	2	15	16
72-10125816	10mm-1.25 STOVER NUT	2	15	16
73-01008840	10mm FLAT WASHER	4	15	16
90-6442	**HARDWARE PACK: Tacoma Diff Bushings**	**1**	**-**	**-**
90-2533	DIFFERENTIAL SLEEVE SHORT	1	4	10
90-2109	DIFFERENTIAL SLEEVE LONG	3	4	10
90-2207	DIFFERENTIAL SPACER SHORT	1	4	10
90-2536	DIFFERENTIAL SPACER LONG	1	4	10
15-11148	COMPRESSION STRUT BUSHING	8	4	10
90-6443	**HARDWARE PACK: Front Brake Line**	**1**	**-**	**-**
90-55089-4	FRONT BRAKE LINE EXTENSION- (Drvr)	1	18	18
90-55089-3	FRONT BRAKE LINE EXTENSION- (Pass)	1	18	18
90-1539	BRAKE LINE EXTENSION: Diff Vent/ABS/ E-Brake Line	4	11	13
90-3340	EMERGENCY BRAKE LINE DROP	2	24	23
90-3341	REAR AXLE BRAKE LINE RELOCATION BRACKET	1	22	21
90-2537	**COMPRESSION STRUTS**	**2**	**20**	**19**
90-6263	**HARDWARE PACK: Bushings And Sleeves**	**1**	**-**	**-**
15-11148	COMPRESSION STRUT BUSHING	8	20	19
90-2109	SLEEVE; COMPRESSION STRUT - 2.75”	4	20	19
90-6234	**HARDWARE PACK: Compression Struts**	**1**	**-**	**-**
70-0501251800	1/2"-13 X 1 1/4" GR 8 HEX BOLT	2	20	19
70-0504001800	1/2"-13 X 4" GR 8 HEX BOLT	4	20	19
72-050100816	1/2"-13 GR 8 STOVER NUT	4	20	19
73-05000034	1/2" SAE HARDENED FLAT WASHER	10	20	19
90-1435	**COMPRESSION STRUT MOUNTS**	**2**	**20**	**19**
13-90126	**U-BOLTS**	**4**	**23**	**22**

Part #	Description	Qty.	Illus.	Page
20-65302	**HI-NUTS**	**1**	**23**	**22**
95-250	**REAR LIFT BLOCKS**	**2**	**23**	**22**
90-6457	**TACOMA REAR CARRIER BEARING SHIM KIT**	**1**	**-**	**-**
90-2524	**3/4" CARRIER BEARING SPACER**	**2**	**-**	**-**
90-2309	**1" CARRIER BEARING SPACER**	**2**	**-**	**-**
90-6458	**HARDWARE PACK**	**1**	**-**	**-**
.100C1000HCS1Z	10mm-1.25 X 50mm HEX BOLT 10.9	2	-	-
.100NWHDY	10mm FLAT WASHER	2	-	-
90-5361	**COMPRESSION STRUT MOUNT: 2WD**	**2**	**-**	**-**
90-6671	**HARDWARE PACK: 2WD Compression Strut Mount**	**1**	**-**	**-**
90-5321	COMPRESSION STRUT MOUNT NUT PLATE	2	-	-
90-5394	**FRONT SWAY BAR DROP BRACKET**	**2**	**16**	**17**

Box 2 of 5-PN 57396/57396MX-2

90-4173	**STEERING KNUCKLE– Driver**	**1**	**-**	**-**
90-4174	**STEERING KNUCKLE– Passenger**	**1**	**-**	**-**
90-6452	**HARDWARE PACK: Knuckle**	**1**	**-**	**-**
70-0622001800	5/8"X 2" Gr. 8 HEX BOLT	4	-	-
73-06200838	5/8" A.N. FLAT WASHER	4	-	-
90-6453	**HARDWARE PACK: Bump Stop**	**1**	**-**	**-**
70-0622001800	ADEL CLAMP (w/ **10mm** hole)	2	-	-
90-3399	**STEERING STOP EXTENSION PLATE- Driver**	**1**	**14**	**15**
90-3400	**STEERING STOP EXTENSION PLATE- Pass**	**1**	**14**	**15**

Box 3 of 5-PN 57396/57396MX-3

90-3335	**REAR CROSSMEMBER**	**1**	**1,2,8,9**	**8,12**
90-6223	**HARDWARE PACK: Sway Bar**	**1**	**-**	**-**
70-0371251800	3/8-16 X 1 1/4" GRADE 8 HEXBOLT	4	16	17
72-037100816	3/8"-16 USS STOVER NUT	4	16	17
73-03700034	3/8" SAE GRADE 8 WASHER	8	16	17
90-3355	**FRONT BUMP STOP- Driver**	**1**	**15**	**16**
90-3359	**FRONT BUMP STOP- Passenger**	**1**	**15**	**16**
90-3353	**COMPRESSION STRUT NUT PLATE: 4WD**	**2**	**20**	**19**

Part #	Description	Qty.	Illus.	Page
90-3346	**DIFFERENTIAL MOUNT– Driver Rear**	**1**	**4**	**10**
90-3348	**DIFFERENTIAL MOUNT– Driver Front**	**1**	**4**	**10**
90-3350	**DIFFERENTIAL MOUNT– Passenger**	**1**	**4**	**10**
90-6314	**HARDWARE PACK: Diff Vent/Bump Stop**	**1**	**-**	**-**
70-0311001800	5/16” X 1” HEX BOLT GR. 8	1	11	13
72-031100816	5/16” STOVER NUT	1	11	13
73-03100838	5/16” USS FLAT WASHER	2	11	13
70-0371501800	3/8” X 1 1/2” HEX BOLT GR. 8	2	15	16
72-037100816	3/8” STOVER NUT GR. 8	2	15	16
73-03700034	3/8” HARDENED FLAT WASHER	4	15	16
90-6299	**HARDWARE PACK: E–Brake Line/Brake Line/ABS Line**	**4**	**-**	**-**
70-0311001500	5/16” X 1” GR.5 HEX BOLT	2	18,21,22,24,25	18,21,23
72-03100100512	5/16” NYLOCK NUT	2	18,21,22,24,25	18,21,23
73-03100030	5/16” SAE FLAT WASHER	4	18,21,22,24,25	18,21,23
90-6444	**HARDWARE PACK: Crossmembers**	**1**	**-**	**-**
70-0755001800	3/4” X 5” GR. 8 HEX BOLT	2	3	9
72-075100816	3/4” GR. 8 STOVER NUT	2	3	9
73-0750083	3/4” SAE GR. 8 FLAT WASHER	4	3	9
70-0501501800	1/2” X 1 1/2” GR.8 HEX BOLT	1	1	8
70-0505501800	1/2” X 5 1/2” GR. 8 HEX BOLT	2	1	8
72-050100816	1/2” GR. 8 STOVER NUT	2	1	8
73-0500083	1/2” SAE GR. 8 FLAT WASHER	5	1	8
90-6445	**HARDWARE PACK: Nut Plate**	**1**	**-**	**-**
70-0371001800	3/8” X 1” GR. 8 HEX BOLT	3	9	12
73-0370083	3/8” SAE GR. 8 FLAT WASHER*	6	9	12
72-037100816	3/8” SAE GR. 8 STOVER NUT*	3	-	-
90-3342	**REAR CROSSMEMBER NUT PLATE**	**1**	**9**	**12**
90-6447	**HARDWARE PACK: Block Off Plates**	**1**	**-**	**-**
90-3344	**CAM BLOCK OFF PLATES- Small Hole**	**4**	**1**	**8**
90-3345	**CAM BLOCK OFF PLATES- Large Hole**	**4**	**3**	**9**

Box 4 of 5-PN 57396-4

927710	**ES SERIES REAR SHOCK**	**2**	**-**	**-**
90-6317	**HARDWARE PACK: Spacer Mount**	**1**	**-**	**-**
72-043200810	7/16-20 GR. 8 PLATED HEX NUT	6	12a,12b,13	14
73-04300830	7/16 SAE FLATWASHER ZINC	6	12a,12b,13	14
73-04300836	7/16 SPLIT LOCK WASHER	6	12a,12b,13	14
6300.01	**URETHANE SPRING ISOLATOR**	**2**	**12a**	**14**
90-3398	**3/8” COIL SPRING SPACER**	**2**	**12a**	**14**
90-2539	**STRUT SPACER**	**2**	**12a**	**14**

****Box 5/6 of 5/6-PN 57396-5/57396MX-6**

13129	**ADD-A-LEAF**	**2**	**23**	**22**
90-3825	**HARDWARE PACK: Add-A-Leaf**	**1**	**-**	**-**
98-00250-1	2 1/2” Spring Plate– Clamps	4	-	-
98-00250-1	2 1/2” Spring Plate– Straps	4	-	-
97-380	3/8” X 5” Center Bolt	2	23	22
8337-1	3/8” Fine Gr. 8 Nut	2	23	22

***Early production kits will not have the (3) extra flat washers and (3) extra stover nuts for 2WD rear crossmember installation.**
**** Add-a-leaf will be box 5 in the standard ES kit and box 6 in the upgraded MX kit**

Introduction:

- This installation requires a professional mechanic!
- We recommend that you have access to a factory service manual for your vehicle to assist in the disassembly and reassembly of your vehicle. It contains a wealth of detailed information.
- Prior to installation, carefully inspect the vehicle’s steering and driveline systems paying close attention to the tie rod ends, ball joints, wheel bearing preload, pitman and idler arm. Additionally, check steering-to-frame and suspension-to-frame attaching points for stress cracks. The overall vehicle must be in excellent working condition. Repair or replace all worn or damaged parts!
- Read the instructions carefully and study the illustrations before attempting installation! You may save yourself a lot of extra work.
- Check the parts and hardware against the parts list to assure that your kit is complete. Separating parts according to the areas where they will be used and placing the hardware with the brackets before you begin will save installation time.
- Check the special equipment list and ensure the availability of these tools.
- Secure and properly block vehicle prior to beginning installation.
- ALWAYS wear safety glasses when using power tools or working under the vehicle!
- Use caution when cutting is required under the vehicle. The factory undercoating is flammable. Take appropriate precautions. Have a fire extinguisher close at hand.
- Foot pound torque readings are listed on the Torque Specifications chart at the end of the instructions. These are to be used unless specifically directed otherwise. Apply thread lock retaining compound where specified.
- **Please note that while every effort is made to ensure that the installation of your Pro Comp lift kit is a positive experience, variations in construction and assembly in the vehicle manufacturing process will virtually ensure that some parts may seem difficult to install. Additionally, the current trend in manufacturing of vehicles results in a frame that is highly flexible and may shift slightly on disassembly prior to installation. The use of pry bars and tapered punches for alignment is considered normal and usually does not indicate a faulty product. However, if you are uncertain about some aspect of the installation process, please feel free to call our tech support department at the number listed on the cover page. We do not recommend that you modify the Pro Comp parts in any way as this will void any warranty expressed or implied by the Pro Comp Suspension company.**

Important!

Tire and wheel choice is crucial in assuring proper fit, performance, and the safety of your Pro Comp equipped vehicle. For this application, a wheel not to exceed 9” in width with a maximum backspacing of 4 3/4” must be used. Additionally, a quality tire of radial design, not exceeding 35” tall X 12.5” wide is recommended. Please note that the use of a 35” X 12.5” tire may require fender modification. Violation of these recommendations will not be endorsed as acceptable by Pro Comp Suspension and will void any and all warranties either written or implied.

IMPORTANT!: 18” OR LARGER WHEELS MUST BE USED IN CONJUNCTION WITH THIS LIFT KIT!

Please Note:

* Front suspension and head light realignment is necessary!
* Speedometer and ABS recalibration will be necessary if larger tires (10% more than stock diameter) are installed.
* Always use NEW cotter pins on re-assembly! (These items are NOT supplied)
* **IT IS ADVISABLE THAT YOU HAVE HELP AVAILABLE WHEN INSTALLING THIS KIT. SOME COMPONENTS ARE HEAVY AND AWKWARD. ADDITIONAL HELP IS GOOD INSURANCE AGAINST INJURY!**

Special Tools:

Please refer to your service manual for more information.
A special removal tool is required for safe removal of the tie rods.
These tools may be purchased at your local Toyota dealer.
You may be able to rent any of these tools at your local parts store.

Optional Equipment Available from your Pro Comp Distributor!

Traction Bars: 72500B
Mounting kit: 72083B
Skid Plate: 57196
Light Bar: 25000
CV Style Driveshaft: 57098
Add-A-Leaf Kit: 13129
Transmission Crossmember: 57091

Also, Check out our outstanding selection of Pro Comp tires to compliment your new installation!

Front Installation:

1. Prior to installing this kit, with the vehicle on the ground. Measure the height of your vehicle. This measurement can be recorded from the center of the wheel, straight up to the top of the inner fender lip. Record the measurements below.

LF:_____ **RF**:_____

LR:_____ **RR**:_____

2. Ensure that your work space is of adequate size and the work surface is level. Place the vehicle in park. Disconnect the negative battery cable from the battery. Place your floor jack under the front cross member and raise vehicle. Place jack stands under the frame rails behind the front wheel wells and lower the frame onto the stands. Remove the jack and place the vehicle back in gear, set the emergency brake, and place blocks both in front of and behind the rear wheels. Remove the front wheels.
3. Remove the skid plate and the skid plate support brackets.
4. Un clip the ABS line from the knuckle, unbolt the anti-lock wiring and sensor from the hub and the brake line from the rear of the knuckle.
5. Using the appropriate tool, remove the outer tie rod end nut and separate from the knuckle.
6. Unbolt the sway bar end links and remove them from the vehicle. Unbolt the sway bar frame mount brackets and remove the sway bar. Save the parts and hardware for reuse.
7. Work on one side of the vehicle at a time.
8. Remove the brake caliper from the rotor and secure them clear from the work area. ***DO NOT*** let the caliper hang by the brake line or damage may result.
9. Remove the front rotors from the front hub.
10. Remove the dust cap and the axle retaining nut.
11. Unbolt the **(4)** bolts holding the hub flange to the knuckle and remove the hub. Save for reinstallation.

NOTE: You will not be able to remove the bolts from the hub assembly after the hub is removed from the knuckle.

12. Support the knuckle and remove the upper ball joint nut from the knuckle and separate using the appropriate tool.
13. Remove the **(2)** bolts from the lower ball joint bracket. Remove the knuckle from the vehicle.
14. Unbolt and remove the factory coil over assembly from the vehicle. Save the hardware for reuse.
15. Remove the lower A-arm from the vehicle.

NOTE: Be sure to support the CV axles before removing the lower A-arm. DO NOT allow the axles to hyperextend or damage to the bearings might result.

16. Repeat steps 8 through 15 on the remaining side of the vehicle.
17. Unbolt the front driveshaft from the differential. Secure the driveshaft up and out of the work area.
18. Unclip all electrical wiring, vacuum lines and vent lines from the differential.
19. Support the differential with a jack and unbolt the rear mount differential mount.
20. Remove the **(2)** front differential mount bolts from the front crossmember. Remove the differential from the vehicle.

IMPORTANT!: Cutting of the frame is not necessary for 2WD installation of this kit. Skip steps 21-26.

21. Raise the rear crossmember **(90-3335)** into the rear frame mounting pockets and hang in place using the supplied **1/2" X 5 1/2"** bolts and small hole cam block off plates **(90-**

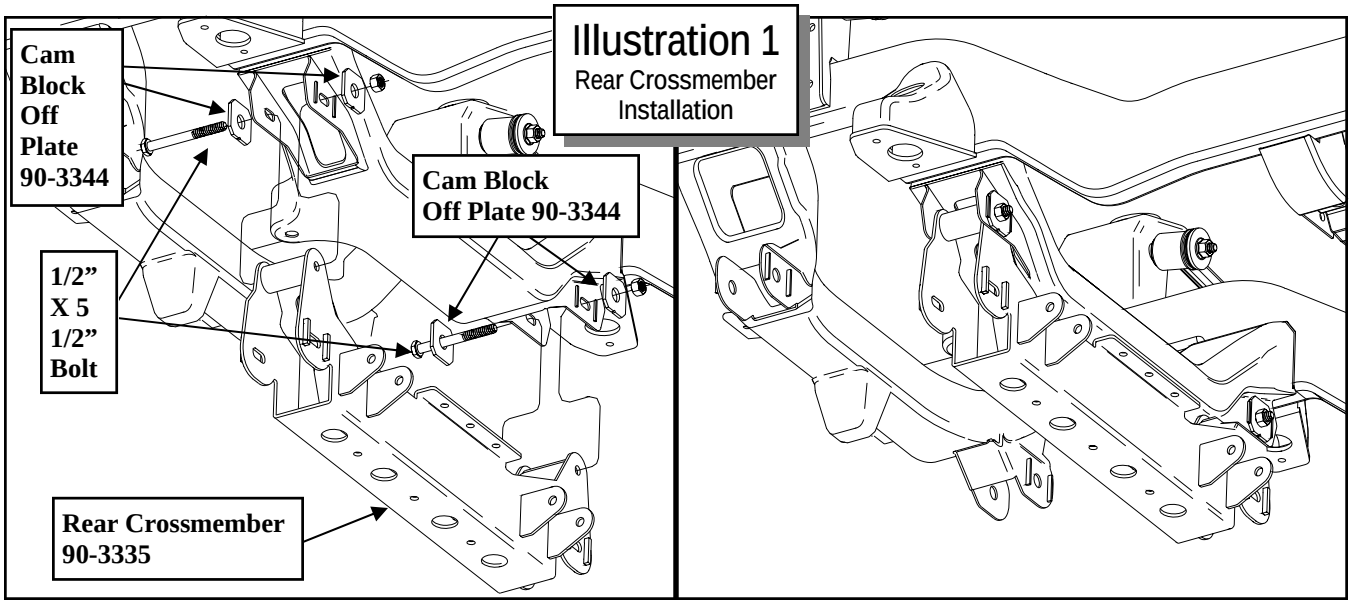

Illustration 1
Rear Crossmember Installation

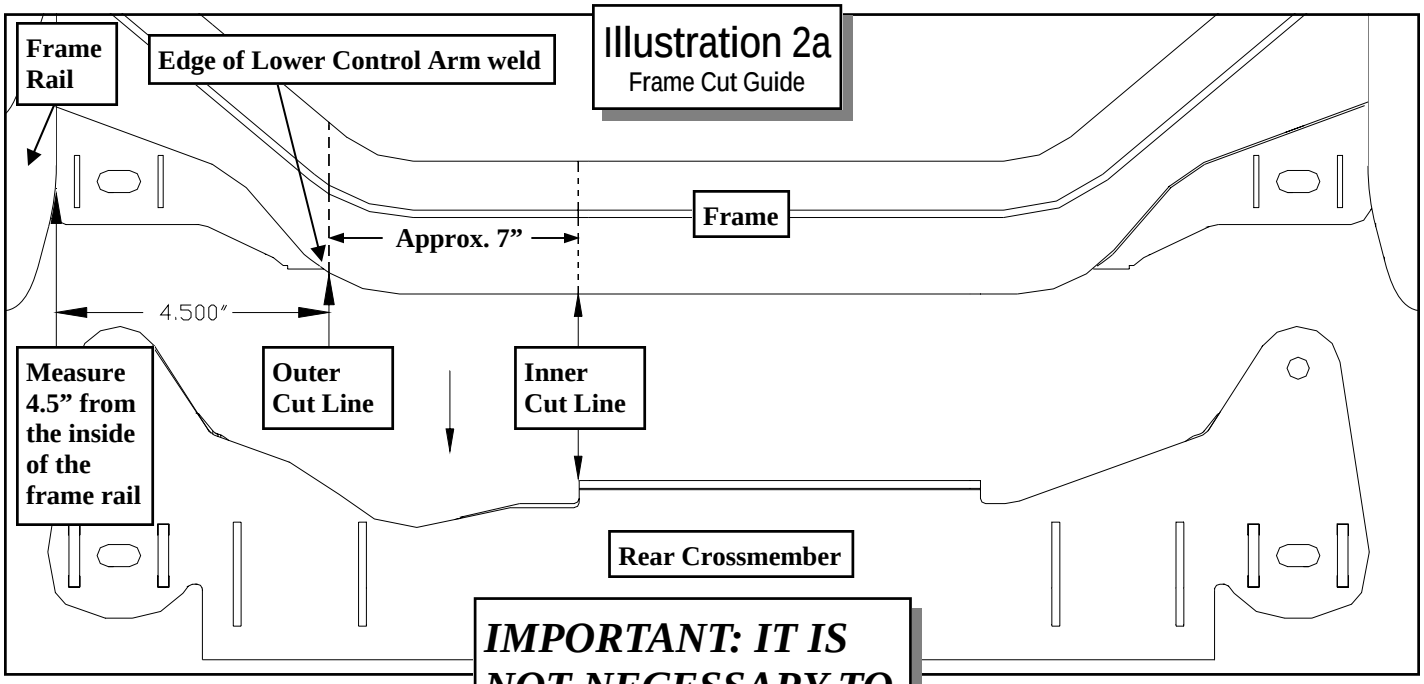

Illustration 2a
Frame Cut Guide

IMPORTANT: IT IS NOT NECESSARY TO CUT FRAME FOR 2WD KIT INSTALLATION

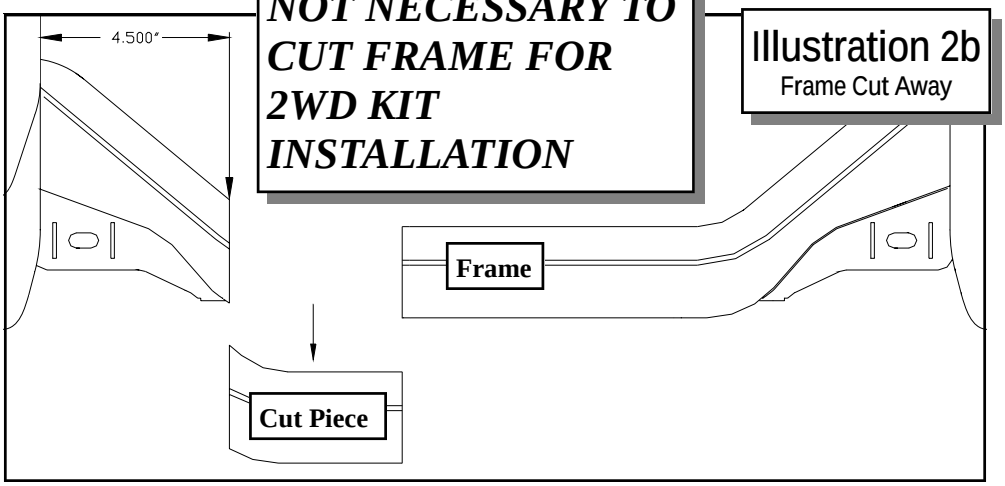

Illustration 2b
Frame Cut Away

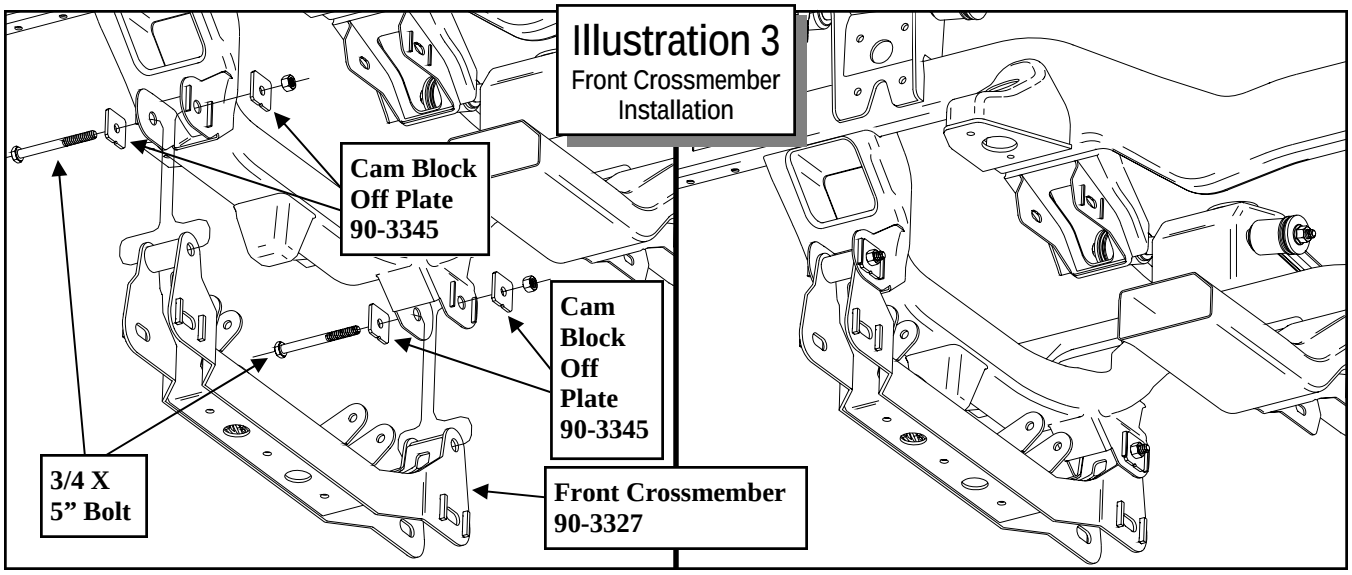

3344). See ILLUSTRATION 1.

NOTE: Due to variations in frame tolerances from the factory, the holes in the cam block off plates are offset to provide adjustability. If the bolt holes do not line up with the cam block off plate notches facing down they can be rotated to aid installation of the cam bolts. In order for the crossmember to stay centered in the vehicle the notches in the cam block off plates must be facing the same way on both driver and passenger sides. Ex. Both notches facing up, down, in or out.

22. Use the rear crossmember **(90-3335)** as a template for marking the frame for cutting.
23. Use the driver side edge of the rear crossmember lip to mark the frame for the inside edge of the cut. See ILLUSTRATION 2a.
24. Measure in **4 1/2"** from the inside of the driver side frame rail. Make sure the measurement is square and mark a line around the frame for the outer edge of the cut. See ILLUSTRATION 2a.

NOTE: Be sure that the outer cut line is at least an 1/8" to 1/4" from the bottom of the rear lower control arm pocket welds.

25. Remove the rear crossmember to allow access for cutting the frame.
26. Using a suitable cutting tool, (abrasive cutoff wheel, Sawz-all, etc.) cut the frame along the previously marked lines as shown in ILLUSTRATION 2a After cutting the section out of the frame, clean the area thoroughly and paint the exposed metal with a good quality paint.
27. Install the front crossmember **(90-3327)** into the front mounting pockets using the supplied **3/4" X 5"** bolts and cam block off plates **(90-3345)**. Install the cam block off plates with the notches facing down. See ILLUSTRATION 3.

NOTE: Due to variations in frame tolerances from the factory, the holes in the cam block off plates are offset to provide adjustability. If the bolt holes do not line up with the cam block off plate notches facing down they can be rotated to aid installation of the cam bolts. In order for the crossmember to stay centered in the vehicle the notches in the cam block off plates must be facing the same way on both driver and passenger sides. Ex. Both notches facing up, down, in or out.

28. Remove the **(2)** front and **(1)** rear factory differential brackets from the differential.
29. Install the supplied bushings and sleeves from hardware pack **(90-6442)** into differential mounts **(**passenger side differential mount **90-3350,** driver side front differential mount **90-3346,** and the rear differential mount **90-**

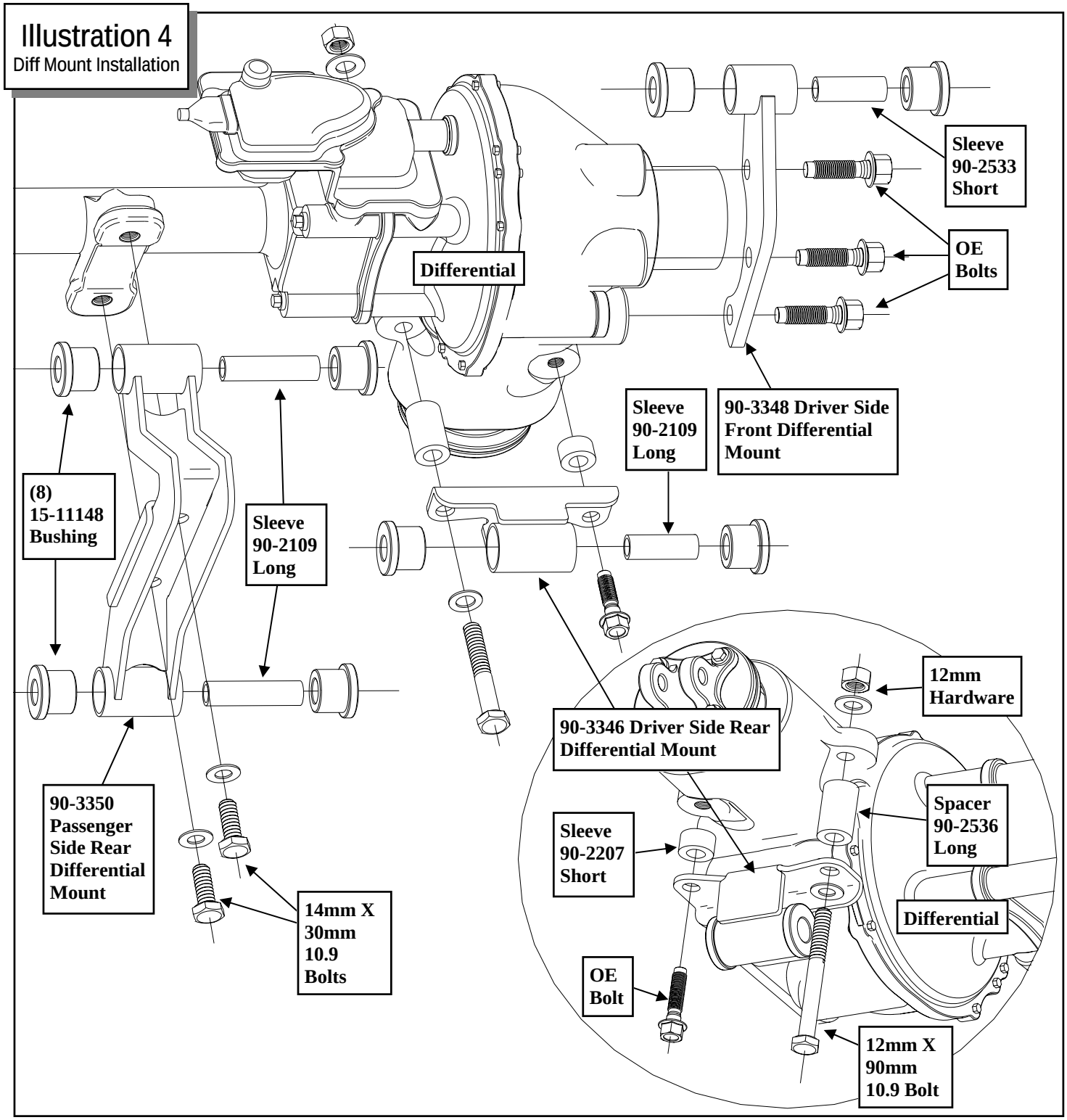
Illustration 4
Diff Mount Installation
Sleeve 90-2533 Short
OE Bolts
Differential
Sleeve 90-2109 Long
90-3348 Driver Side Front Differential Mount
(8) 15-11148 Bushing
Sleeve 90-2109 Long
12mm Hardware
90-3346 Driver Side Rear Differential Mount
Spacer 90-2536 Long
Sleeve 90-2207 Short
90-3350 Passenger Side Rear Differential Mount
Differential
14mm X 30mm 10.9 Bolts
OE Bolt
12mm X 90mm 10.9 Bolt

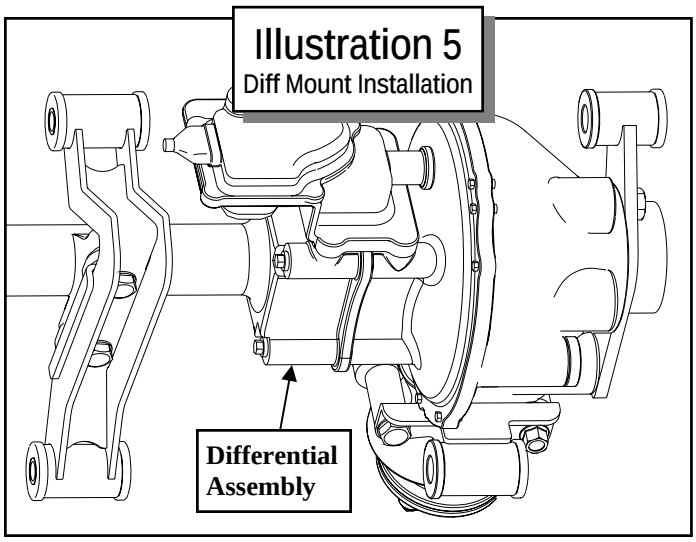

Illustration 5
Diff Mount Installation

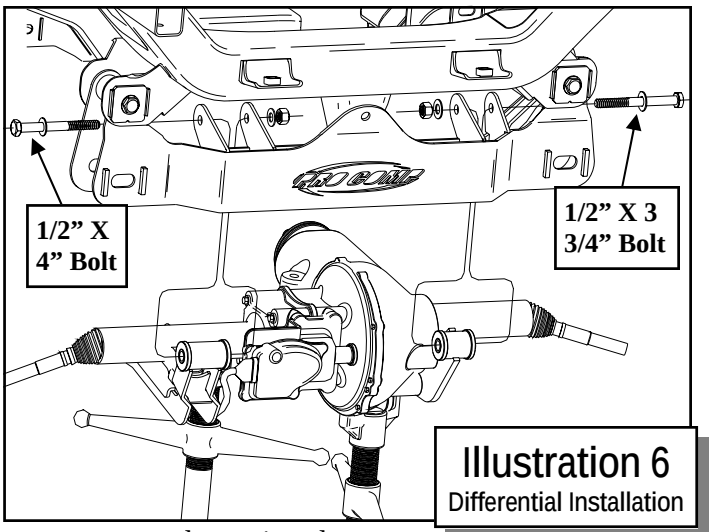

Illustration 6
Differential Installation

3348). See ILLUSTRATION 4.

30. Install the **(3)** supplied differential brackets (pass side mount **90-3350**, driver side front mount **90-3346**, and the rear mount **90-3348**) to the differential. Leave bolts slightly loose**.** See ILLUSTRATION 4.

31. Support the CV axles and carefully raise the differential assembly into place.

NOTE: <u>DO NOT</u> allow the axles to hyperextend or damage to the bearings might result.

32. Raise differential and secure the front driver differential mount **(90-3346)** and passenger side differential mount **(90-3350)** to the front crossmember using the supplied **1/2" X 3 3/4"-drvr side** and **1/2" X 4"-pass side** bolts and hardware. See ILLUSTRATION 6.

33. Install the rear crossmember **(90-3335)** into the rear frame mounting pockets using the supplied **1/2" X 5"** bolts and cam block off plates **(90-3344)**. Install the cam block off plates with the notch facing down. See ILLUSTRATION 1.

34. Secure the driver side rear differential mount **(90-3348)** and the rear of the passenger side differential mount **(90-3350)** to the rear crossmember using the supplied **1/2" X 4"** bolts and hardware. See ILLUSTRATION 7.

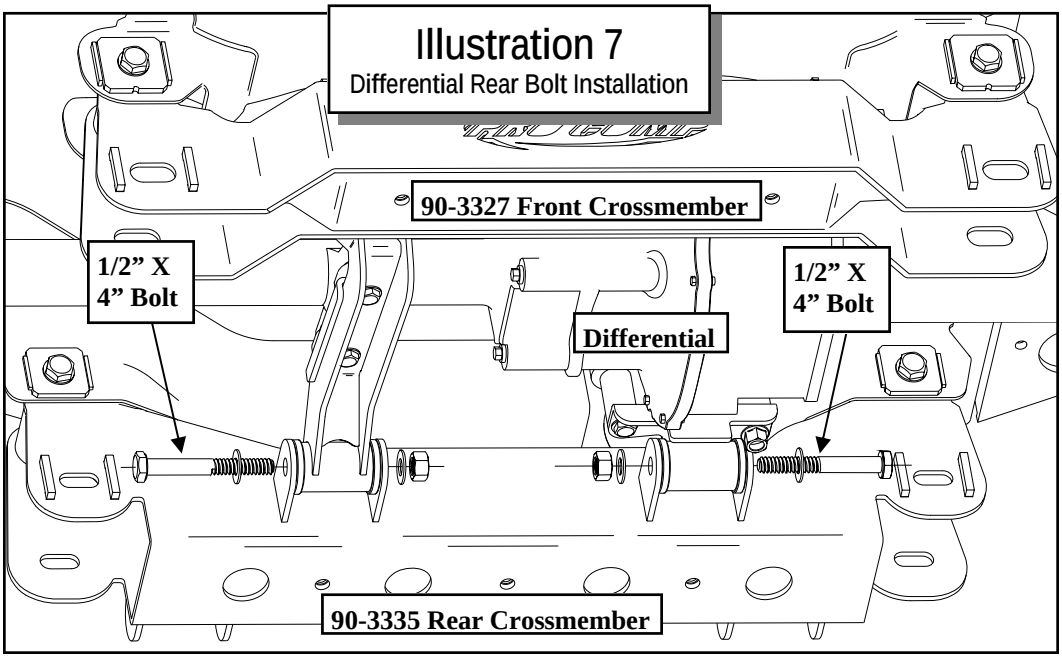

Illustration 7
Differential Rear Bolt Installation

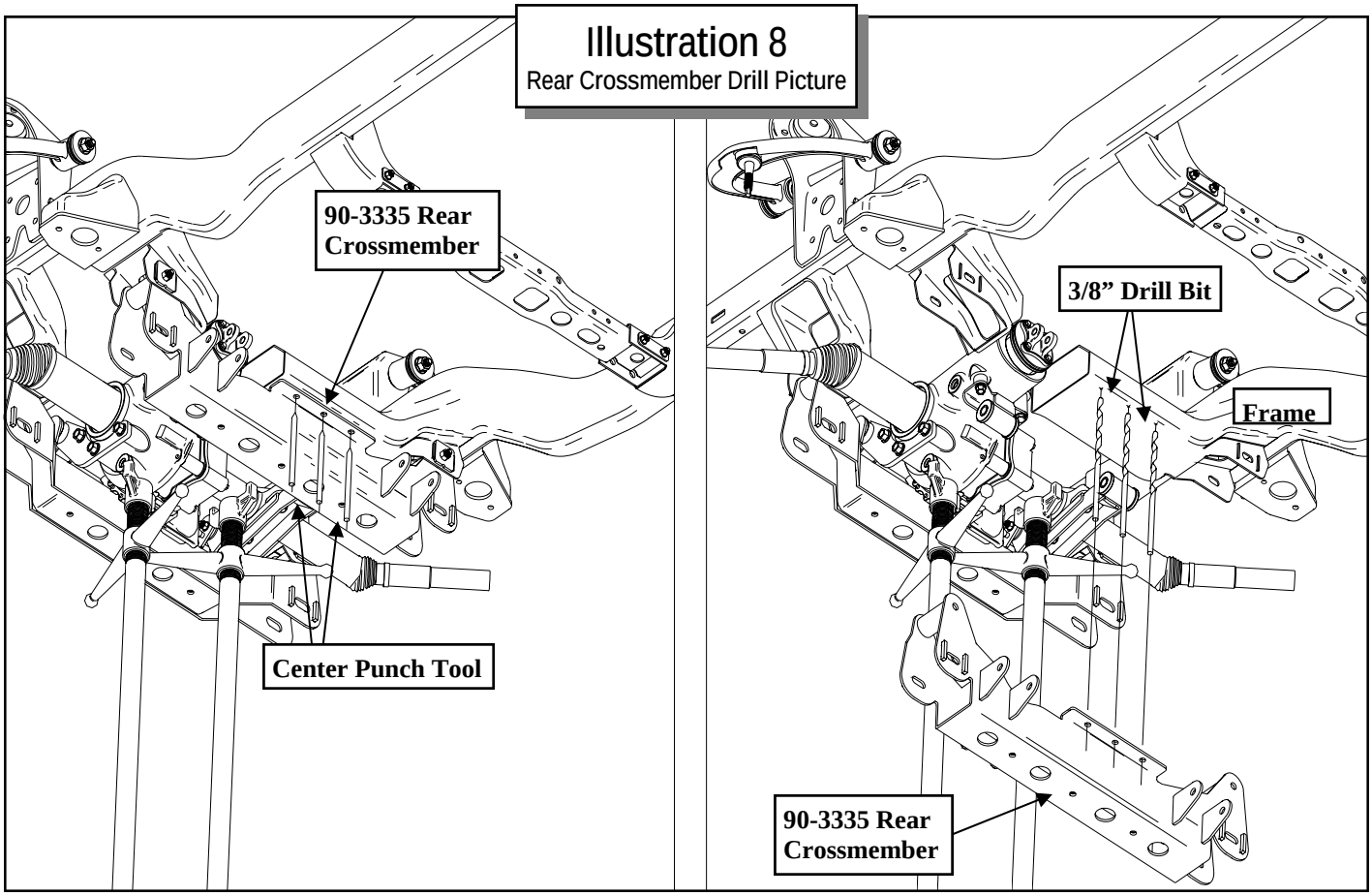

Illustration 8
Rear Crossmember Drill Picture

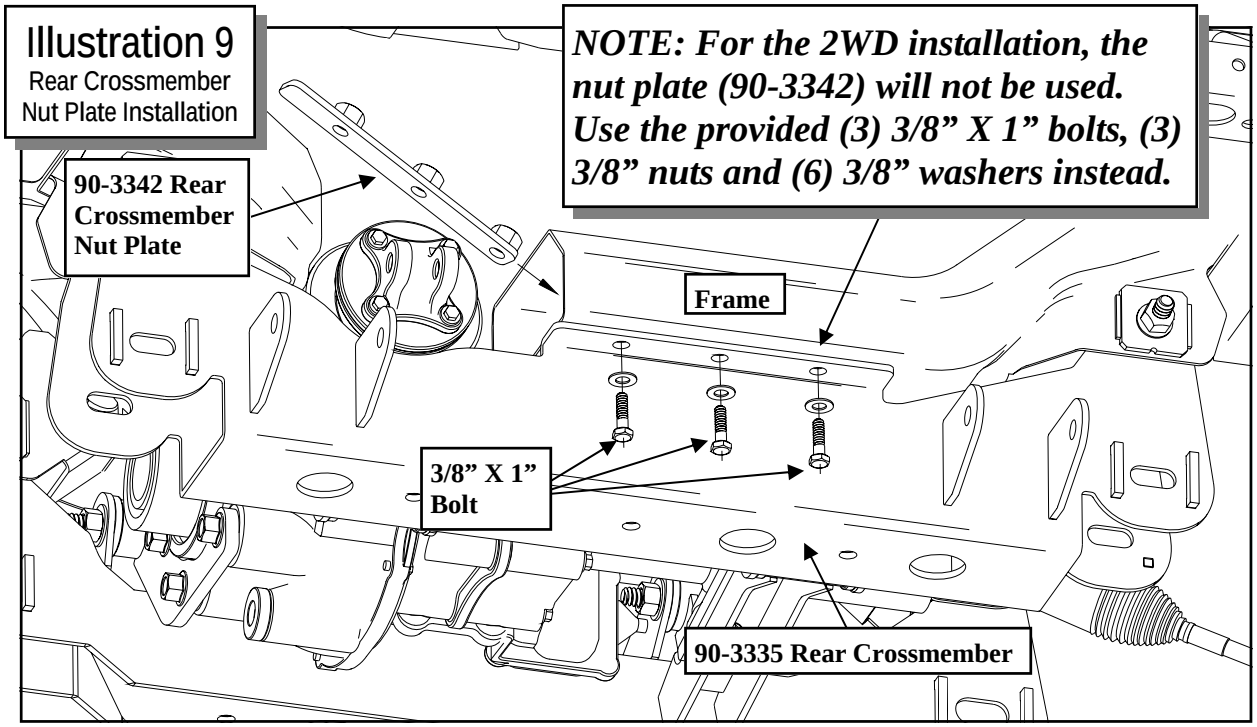

Illustration 9
Rear Crossmember
Nut Plate Installation

NOTE: For the 2WD installation, the nut plate (90-3342) will not be used. Use the provided (3) 3/8” X 1” bolts, (3) 3/8” nuts and (6) 3/8” washers instead.

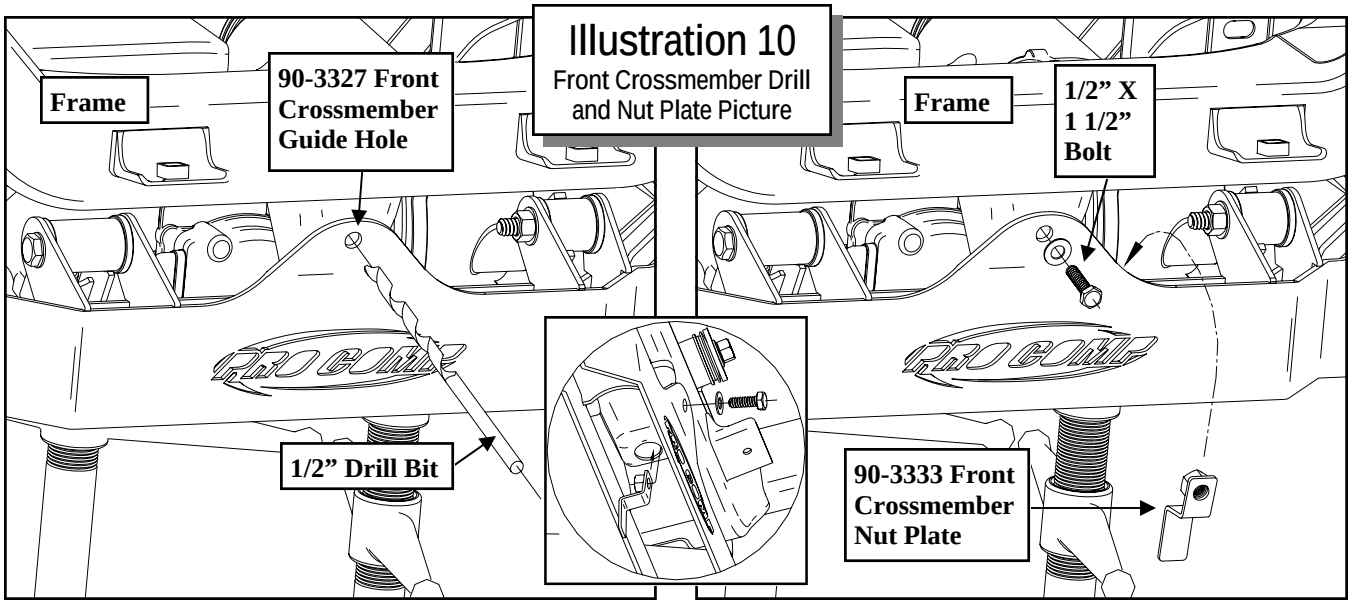

Illustration 10
Front Crossmember Drill and Nut Plate Picture

35. Mark the **(3)** holes in the rear crossmember **(90-3335)** lip for drilling. See ILLUSTRATION 8.

36. Center punch and drill out the previously marked holes in the frame using a **3/8"** drill bit. See ILLUSTRATION 8.

37. Insert the rear crossmember nut plate **(90-3342)** inside the previously drilled frame section See ILLUSTRATION 9.

NOTE: For the 2WD installation the nut plate (90-3342) will not be used. Use the provided (3) 3/8" X 1", (3) 3/8" nuts and (6) 3/8" washers from pack (90-6445). Early production kit will not have the extra 3/8" hardware.

38. Secure the rear crossmember lip to the nut plate **(90-3342)** using the supplied **3/8" X 1".** Torque bolts according to the torque chart on page 25. See ILLUSTRATION 9.

39. Install the lower A-arms into the front and rear crossmember mounting pockets. Secure using the **OE** cam bolts.

40. Torque all crossmember and differential bolts according to the torque chart on page 25. ***DO NOT*** torque the lower cam bolts until the vehicle is back on the ground.

41. Mark and center punch the frame for the remaining center hole in the front crossmember. See ILLUSTRATION 10.

42. Drill the marked hole in the front crossmember using a **1/2"** drill bit. Secure using the supplied **1/2" X 1 1/2"** bolt and hardware. See ILLUSTRATION 10.

43. Under the hood, the previously disconnected differential breather line and vacuum line will need to be unbolted from the driver side fender well. Bolt the differential vent drop bracket **(90-1539)** to the fender well using the **OE** bolt. Attach the vacuum and breather lines to the installed drop bracket using the supplied **5/16" X 1"** bolt and hardware. See ILLUSTRATION 11.

44. Reattach differential electrical, vacuum and

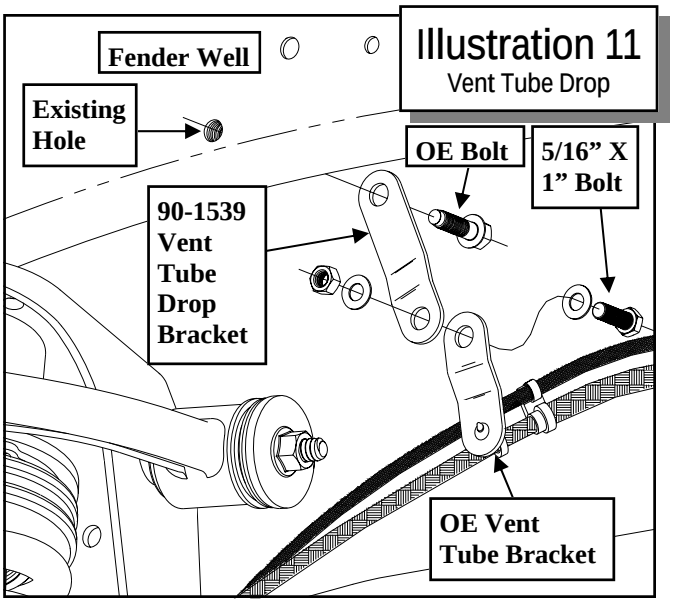

Illustration 11
Vent Tube Drop

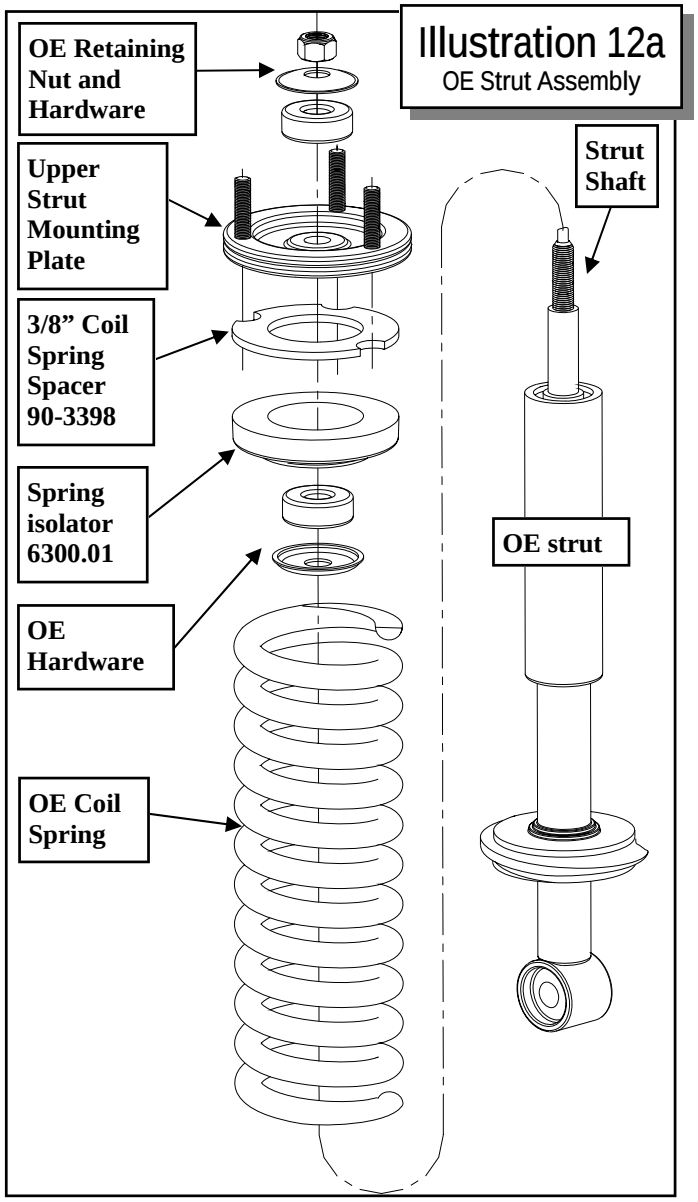

Illustration 12a
OE Strut Assembly

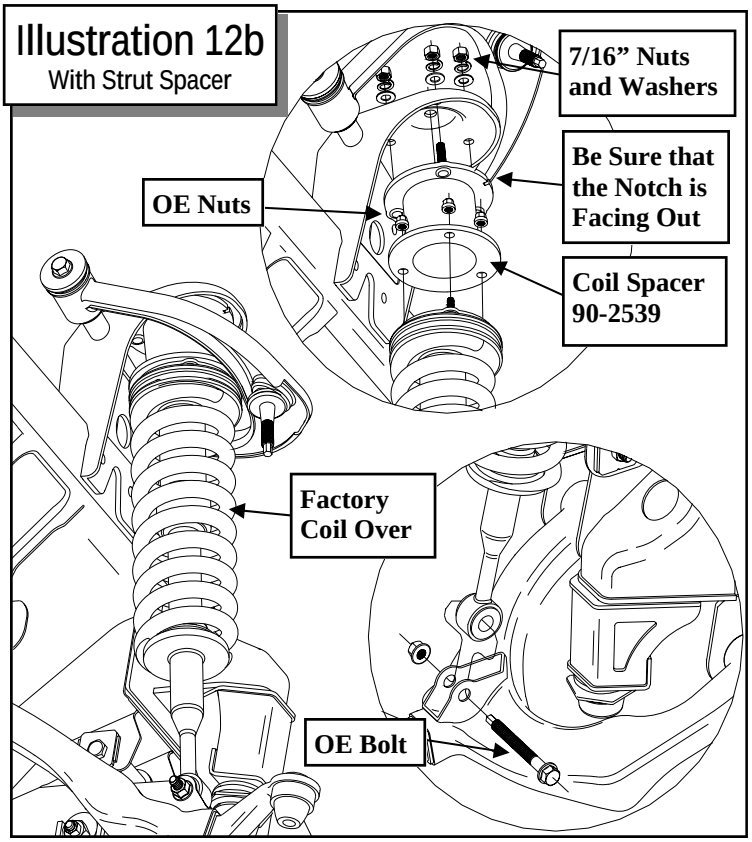

Illustration 12b
With Strut Spacer

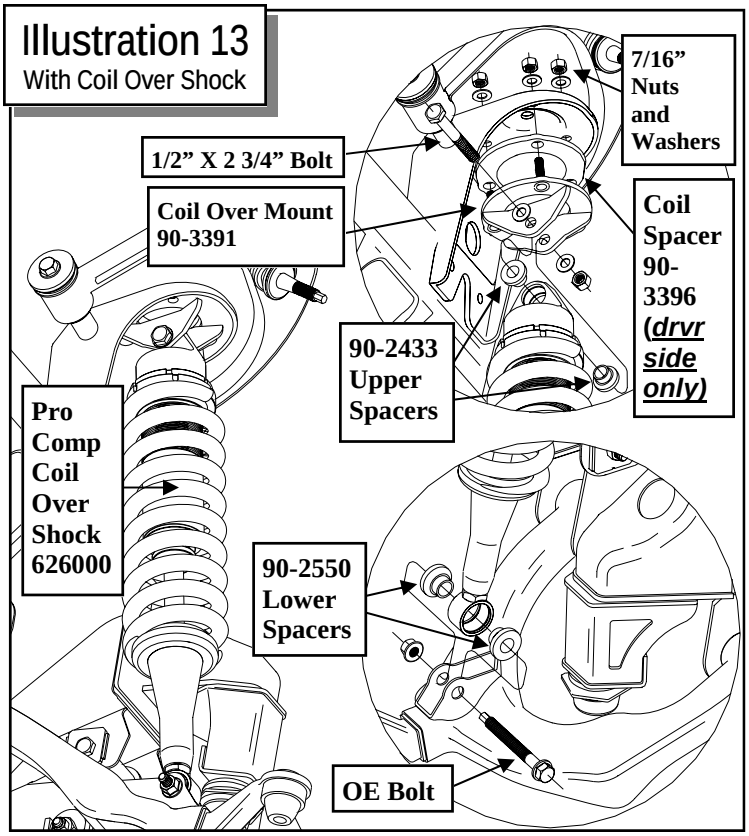

Illustration 13
With Coil Over Shock

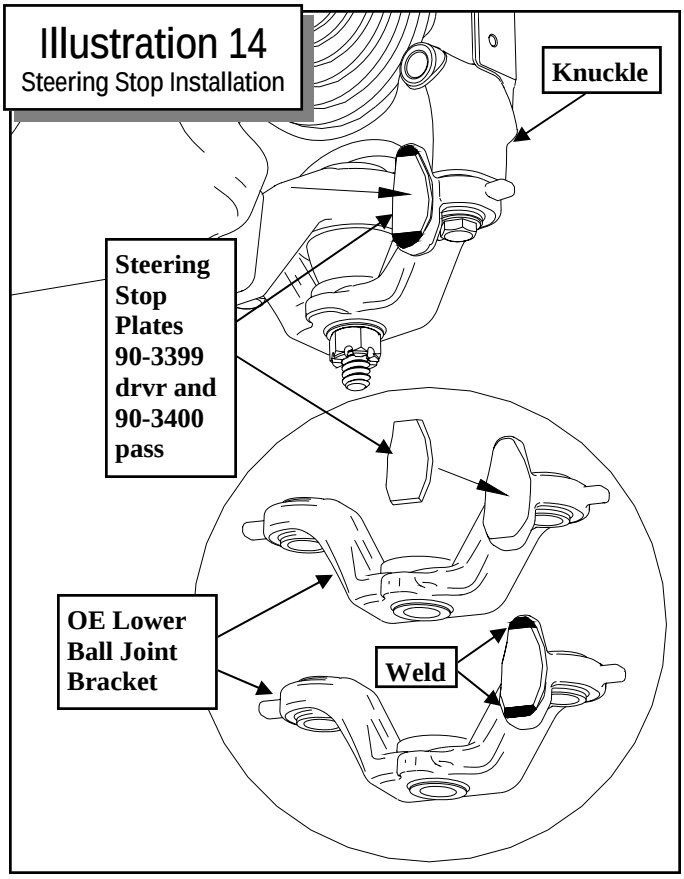

Illustration 14
Steering Stop Installation

vent connections. Reattach the front driveshaft and torque the **OE** nuts to 65 ft./lbs.

45. **WITH THE STRUT SPACERS.** Scribe an index mark on the top of the **OE** coil spring to the upper strut mounting plate.

CAUTION: The coil is under extreme pressure and severe bodily injury may occur if the coil spring is disassembled without using a coil spring compressor.

46. Compress the coil spring on the strut assembly with a suitable coil spring compressor so that the coil spring has about **3/8"** play in the strut and remove the upper strut isolator retaining nut.

NOTE: Do not use an impact gun to remove the retaining nut. It will damage the strut shaft.

47. Remove the **OE** coil spring isolator from the upper strut mounting plate and discard.

NOTE: Inspect the front shock assembly for any damage or fluid leakage. Replace if necessary.

48. Install the supplied **3/8"** coil spring spacer **(90-3398)** and the new spring isolator **(6300.01)** to the upper strut mounting plate. See ILLUSTRATION 12a.

49. Reinstall the compressed coil spring onto the strut assembly and re-attach the upper strut mount plate using the stock hardware. Torque the upper strut mounting plate retaining nut to 20 ft./lbs. See ILLUSTRATION 12a.

50. Decompress the coil spring on the strut assembly. Make sure that the spring is seated correctly into the strut assembly and aligned with the previously scribed index mark on the upper strut mounting plate.

51. Attach the new strut spacer **(90-2539)** to the top of the shock using the **OE** hardware. Torque to 47 ft./lbs. Fit the strut assembly and spacer into the stock mounting locations. Fasten using the supplied hardware on the top from hardware pack **(90-6317)** torque to 45-50 ft./lbs. See ILLUSTRATION 12b.

NOTE: Be sure that the notch in the strut spacer (90-2539) is facing to the outside of the vehicle.

NOTE: Some early production kits may not have a notch cut in the (90-2539) spacer. If the spacer does not have the notch, position the spacer so the top end is angled with the lower end of taper facing the inside of the vehicle.

52. Install the **OE** bolt through the lower strut mount and a-arm. Torque to 61 ft./lbs.

53. **WITH THE COIL OVERS.** Insert the mono ball spacers **(90-2433)** from pack **(90-6450)** in the top of the coil over as shown in ILLUSTRATION 13.

54. Insert the mono ball spacers **(90-2550)** from pack **(90-6450)** in the bottom of the coil over as shown in ILLUSTRATION 13.

NOTE: The spacers are a tight fit. A press might be needed to fit the spacers into the

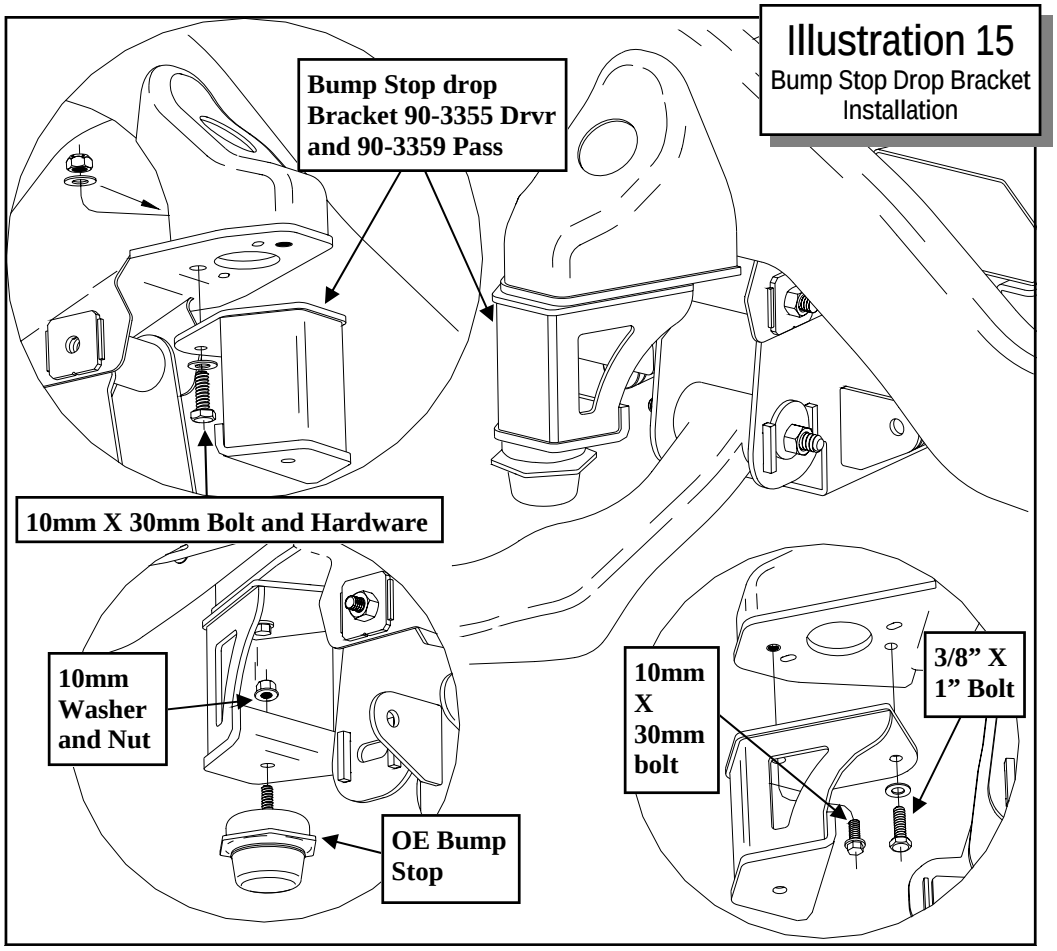

Illustration 15
Bump Stop Drop Bracket Installation

mono balls.

55. Install the new Pro Comp coil over shock **(626000)** to the upper bracket **(90-3391)** with the supplied **1/2" X 2 3/4"** hardware from hardware pack **(90-6318).**

56. ***<u>ON THE DRIVER SIDE ONLY</u>,*** install the coil spacer **(90-3396)** onto the driver side upper coil over mount **(90-3391)** studs. See ILLUSTRATION 13.

57. Fasten upper bracket to truck using the supplied **7/16"** hardware on the top from hardware pack **(90-6317)** and torque to 45-50 ft./lbs. See ILLUSTRATION 13.

58. Install the **OE** bolt through the lower shock mount and a-arm. Torque to 61 ft./lbs.

NOTE: Supplemental instructions for MX coil over installation are located in box 57396BMX-4/57097BMX-1.

59. Repeat steps 45 through 52 *(for use with strut spacer)* or 53 through 58 *(for use with coil over)* on the remaining side of the vehicle.

60. Work on one side of the vehicle at a time.

61. Transfer rear dust seal out of the **OE** knuckles the new Pro Comp knuckles **(90-4173 drvr** and **90-4174 pass)**.

NOTE: The factory backing plates will not be transferred and reused.

62. Support the lower A-arms and position the new knuckle **(90-4173 drvr** and **90-4174 pass)** in place. Slide the CV axle through the knuckle from the rear and attach the knuckle to the upper ball joint. Torque to 81 Ft./lbs. Install a new cotter pins from pack **90-6623.**

63. Secure the knuckle to the lower ball joint bracket using the **(2)** supplied **5/8" X 2"** mounting bolts. Apply thread locking compound to the bolts. Torque the bolts to 125-150 ft./lbs.

64. Clean and grind the paint off of the upper and lower lip of the steering stop on the lower ball

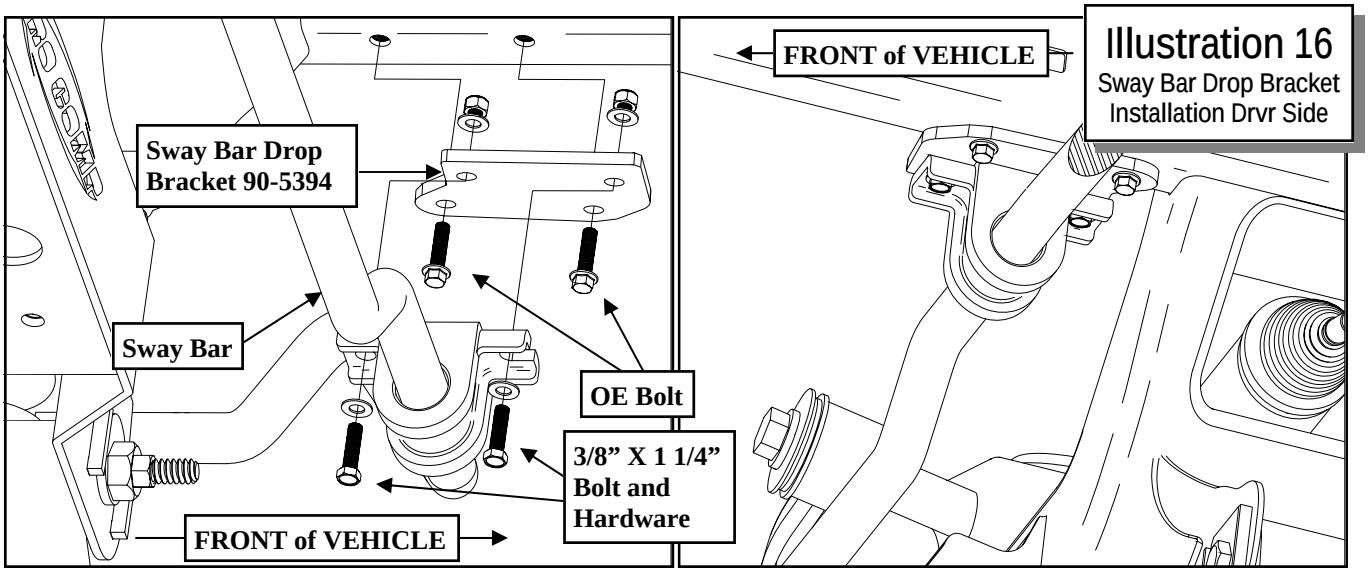

Illustration 16
Sway Bar Drop Bracket Installation Drvr Side

joint bracket. Clamp the steering stop extension plates **(90-3399 drvr** and **90-3400 pass)** into place on the steering stop. Place wet rags over the lower ball joint to protect from welding sparks. See ILLUSTRATION 14.

65. Weld a bead along the top and bottom of the extension plates to secure it to the lower ball joint bracket. See ILLUSTRATION 14.

66. After welding on the steering stop extension plates, clean the area thoroughly and paint the exposed metal with a good quality paint.

NOTE: If you do not have access to a welder at this time the extension plates can be welded on at the completion of this installation or lower ball joint bracket can be removed and taken to a qualified welding shop.

67. Repeat steps 61 through 66 on the remaining side of the vehicle.

68. Remove the factory bump stops from the frame.

69. Install the previously removed factory bump stop to the bump stop drop brackets **(90-3355 drvr** and **90-3359 pass)** secure using the supplied **10mm** washer and nut. See ILLUSTRATION 15.

70. Install the new bump stop drop brackets to the frame using the **10mm** bolt and washer in the front threaded hole and the **3/8" X 1"** bolt and hardware in the rear unthreaded hole. Torque the hardware according to the chart on page

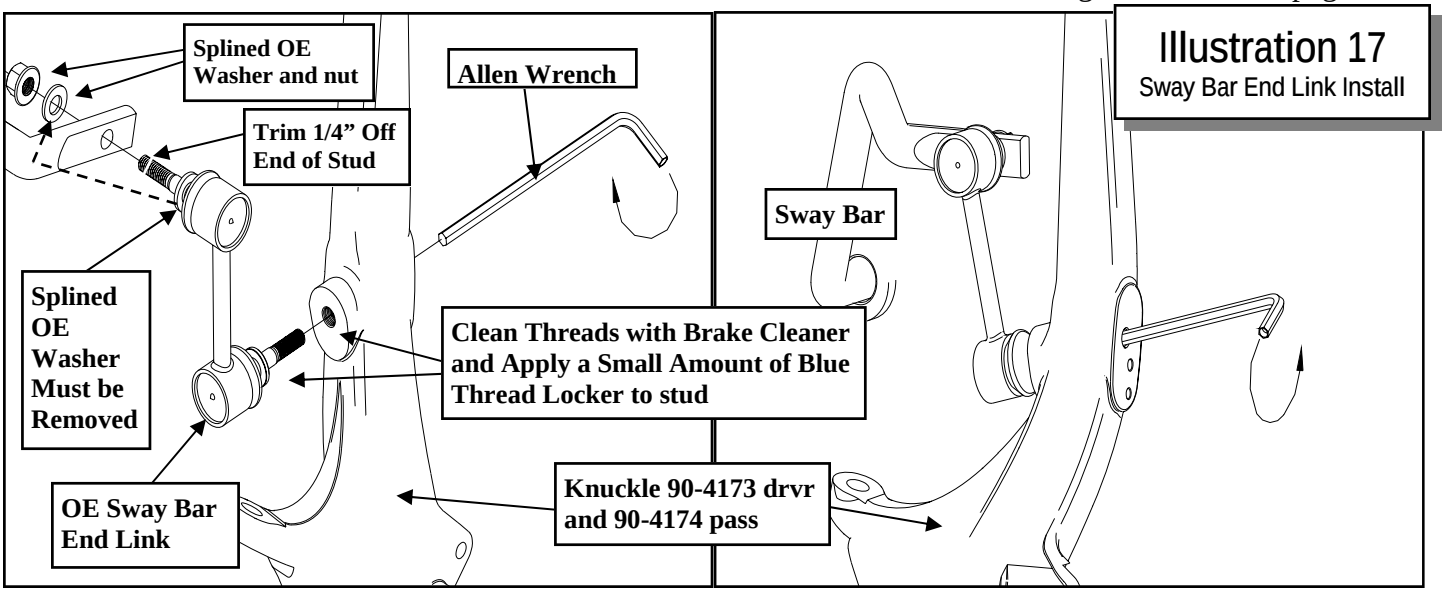

Illustration 17
Sway Bar End Link Install

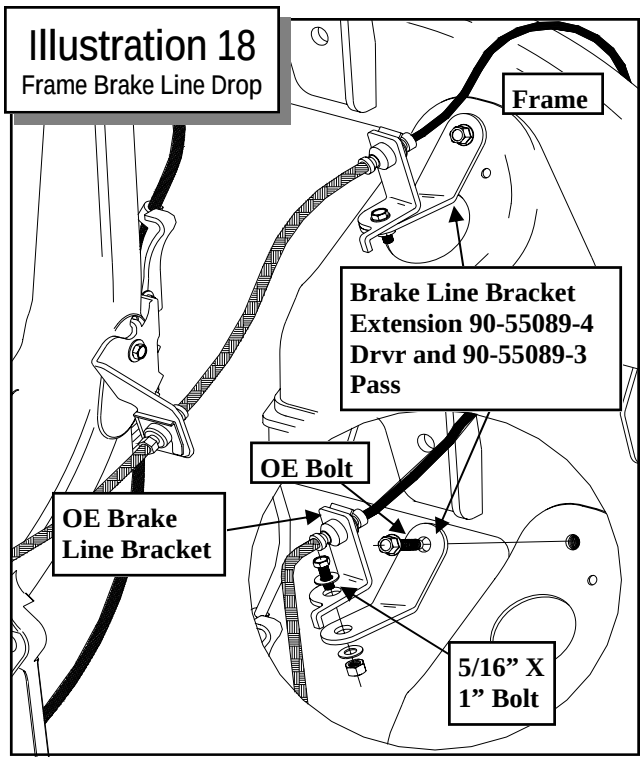

Illustration 18
Frame Brake Line Drop

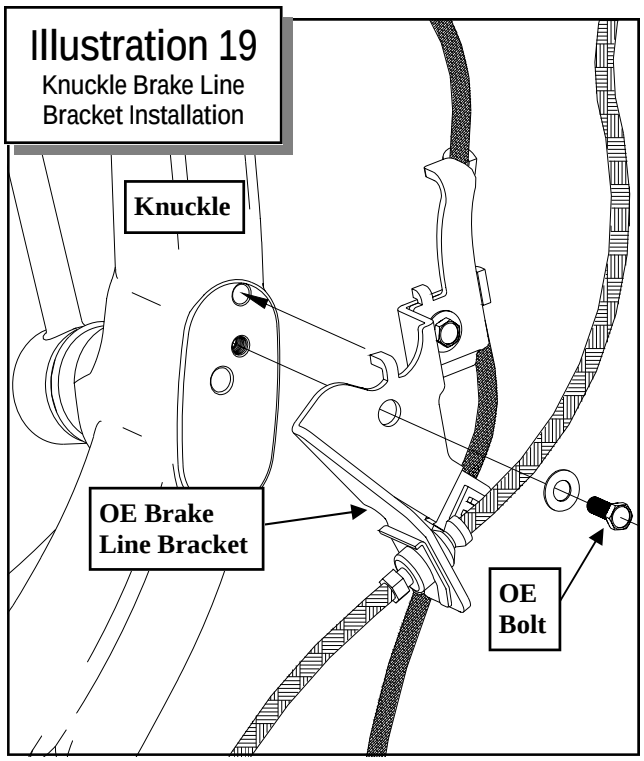

Illustration 19
Knuckle Brake Line Bracket Installation

25. See ILLUSTRATION 15.

71. Repeat steps 68 through 70 on the remaining side of the vehicle.

72. Insert from the top and secure the tie rod end to the knuckle and torque to 67 ft./lbs. Install a new cotter pins from pack **90-6623.**

73. Install the sway bar drop brackets **(90-5394)** to the original sway bar mounting holes in the frame, with the protruding rounded portion on the outside facing the rear of the vehicle. Secure to the frame using the **OE** bolts. Torque to 30 ft./lbs. See ILLUSTRATION 16.

74. Install the previously removed **OE** driver side sway bar end link on to the passenger side knuckle. Install the link facing up. See ILLUSTRATION 17.

75. Install the previously removed **OE** passenger side sway bar end link on to the driver side knuckle. Install the link facing up. See ILLUSTRATION 17.

NOTE: Be sure to clean the sway bar end link mounting threads in the knuckle with brake cleaner. When dry apply a small amount of blue thread locker to the sway bar end link mounting stud. Do not over tighten and strip the stud.

76. The **OE** splined washers on the top end of the sway bar end links must be removed. Carefully tap the washer off the stud. See ILLUSTRATION 17.

77. Using a die grinder carefully remove the factory aluminum sway bar collar from the sway bar.

NOTE: Take care not to damage the sway bar during removal of the collar.

78. Using a suitable cutting tool, (abrasive cutoff wheel, etc.) carefully trim a **1/4"** off of the end of the top sway bar link stud. See ILLUSTRATION 17.

79. Reinstall the sway bar to the new sway bar drop brackets using the supplied **3/8" X 1 1/4"** bolts and hardware. Leave hardware loose at this time. See ILLUSTRATION 16.

80. Reconnect the sway bar end links to the sway bar. Place the previously removed splined **OE** washer under the **OE** nut and secure.

81. Push the sway bar back, in the slotted drop bracket holes, so the end of the sway bar is as close to the knuckle as possible without making contact.

82. Torque the remaining **3/8"** sway bar drop

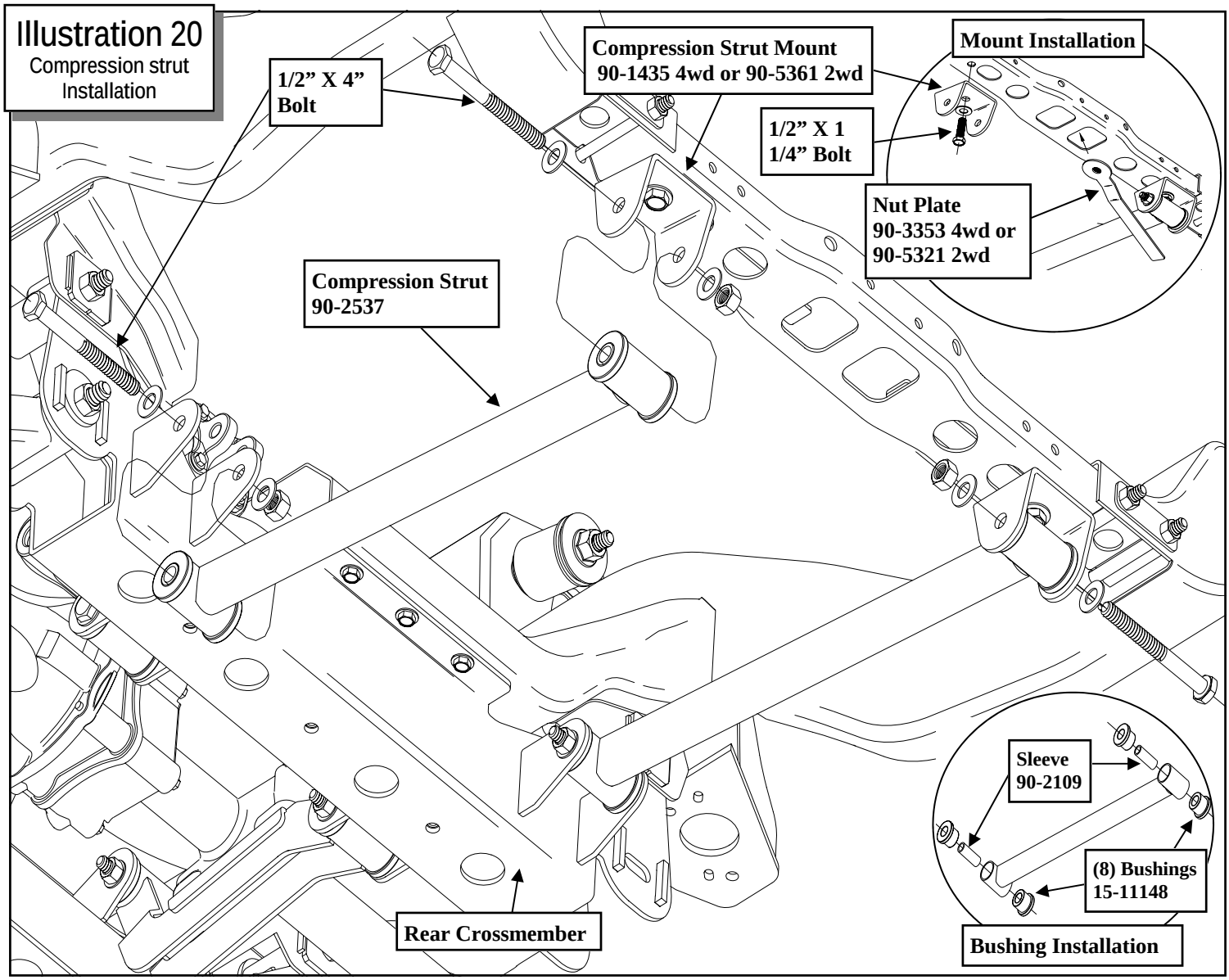

hardware according to the chart on page 25.

83. On both sides of the vehicle, install the **OE** hub onto the CV axles and into new Pro Comp knuckles. Tighten all the **OE** hardware carefully. Be sure to follow the factory assembly procedures and torque the **(4)** wheel hub mounting bolts to 59 ft./lbs.

84. Attach the previously removed **OE** retaining nut to the end of the CV shaft. Torque to 173 Ft./lbs. Install a new cotter pin and reattach the dust cap.

85. Install the front rotors on to the front hubs.

86. Unbolt the factory brake line bracket from the frame. Install the brake line drop **(90-55089-4 drvr** and **90-55089-3 pass)** to the factory brake line bracket using the supplied **5/16" X 1"**. Secure the new brake line drop bracket to the original brake line mounting hole in the frame using the **OE** bolt. See ILLUSTRATION 18.

NOTE: You may need to unbolt the upper bracket behind the inner fender to provide enough slack in the line for it's new position.

87. Reinstall the brake calipers to the new knuckle using the previously removed **OE** bolts. Torque to 75-85 ft./lbs.

88. Reattach the **OE** knuckle brake line bracket to the new knuckle using the **OE** bolt. See ILLUSTRATION 19.

89. Connect the anti-lock wiring harness and sensor to the hub if applicable. Reroute the ABS line and secure the line to the threaded hole on the back of the new knuckle using the supplied Adel clamp and **OE** bolt. Secure the ABS sensor in place with the previously removed **OE** bolt.
90. Install the bushings **(15-11148)** and sleeves **(90-2109)** from hardware pack **(90-6263)** into the compression struts **(90-2537).**
91. Install the compression struts into the mounting tabs on the rear crossmember using supplied **1/2" X 4"** hardware. See ILLUSTRATION 20.
92. Using the existing outer hole attach the compression strut mounts **(90-1435 4wd or 90-5361 2wd)** to the transmission crossmember. Use the **1/2" X 1 1/2"** bolt and nut plate **(90-3353 4wd or 90-5321 2wd)** to secure the mounts to the crossmember. See ILLUSTRATION 20.
93. Rotate the compression struts up and secure them to the mounts using the supplied **1/2" X 4"** bolt and hardware. See ILLUSTRATION 20.
94. Torque the compression strut hardware according to the chart on page 25.
95. On both sides of the vehicle, check the routing of the brake lines and the ABS wire harnesses. There must be no pinching, rubbing, or stretching of either component. Use zip ties to secure these items to the steering components. At full droop, cycle the steering from lock to lock while observing the reaction of these components. Reposition them if needed.
96. Reconnect the negative battery cable to the battery.
97. Reinstall the wheels and lower the vehicle to the ground. Torque the lug nuts according to the wheel manufacturers recommendations.
98. With the truck on the ground center the lower A-arm cam bolts and torque to 100 ft./lbs.
99. Center the steering wheel and lock it in place. Set the toe by adjusting the tie rod ends properly.
100. Lock the outer tie rod ends by tightening the **16mm** jam nuts.
101. Recheck all hardware for proper installation and torque at this time.

IMPORTANT! BE SURE TO BRING THE VEHICLE IMMEDIATELY TO A REPUTABLE ALIGNMENT SHOP TO BE ALIGNED!

IMPORTANT!:

If the vehicle will not properly align, the outer tie rod ends may need to be shortened by 5/16". Measure in 5/16" from the end of the tie rod end and scribe a line. Using a suitable cutting tool, (abrasive cutoff wheel, Sawz-all, etc.) cut the end along the previously marked line. Be sure the cut is made straight and square or else the jam nut will not hold it's torque properly.

NOTE: Trimming the ends of the inner tie rod may be necessary to keep the outer tie rod ends from bottoming out.

Install the new 16mm jam nut onto the inner tie rod. Thread the jam nut and outer tie rod end on as far as they will go on the inner tie rod with the stud facing down.

Insert from the top and secure the tie rod end to the knuckle and torque to 67 ft./lbs. Install a new cotter pins from pack 90-6623.

NOTES:

⇒ **On completion of the installation, have the suspension and headlights re-aligned.**

⇒ **After 100 miles recheck for proper torque on all newly installed hardware.**

⇒ **Recheck all hardware for tightness after off road use.**

Rear Installation:

1. Block the front tires and raise the rear of the vehicle. Support the frame with jack stands forward of the rear springs.
2. Remove the rear wheels.
3. Remove the shocks on both sides of the vehicle. It may be necessary that you slightly raise the axle to unload the shocks for removal.
4. On both sides of the vehicle, unbolt the emergency brake cable brackets from the leaf spring front hanger and the leaf spring clip. Save the hardware for reuse.
5. Remove the ABS wiring bracket from the frame and install the ABS wiring extension **(90-1539)**. Use the **OE** bolt to secure the drop bracket to the frame. Reconnect the ABS wire bracket to the drop bracket using the supplied **5/16" X 1"** bolt and hardware. See ILLUSTRATION 21.
6. Unbolt the **OE** brake line bracket, that connects the two rubber lines to the metal lines, from the rear axle.
7. Install the rear axle brake line relocation bracket **(90-3341)** to the rear end using the **OE** bolt. Carefully rotate the factory brake line bracket forward and secure to the brake line bracket using the supplied **5/16" X 1"**. See ILLUSTRATION 22.
8. Work on one side of the vehicle at a time.
9. Support the rear axle with a floor jack and remove the **U-bolts** on the driver side. Loosen the **U-bolts** on the passenger side and carefully lower the rear axle.

NOTE: Be sure not to over extend the rear brake line and rear axle vent line.

10. Use C-clamps to hold the leaves of the rear leaf spring together and remove spring center bolt.
11. Disassemble the leaf spring and insert the add-a-leaf **(13129).** See ILLUSTRATION 23.

NOTE: Add-a-leaf will be placed in the spring assembly progressively according to length. For example, if the existing leaves are 32" long and 25" long and the add-a-leaf is 28" long, place the add-a-leaf between the existing leaves.

12. Using the C-clamps, re-clamp and bolt the leaf pack back together using the supplied center bolt **(97-380)** with the head of the bolt facing down. See ILLUSTRATION 23.

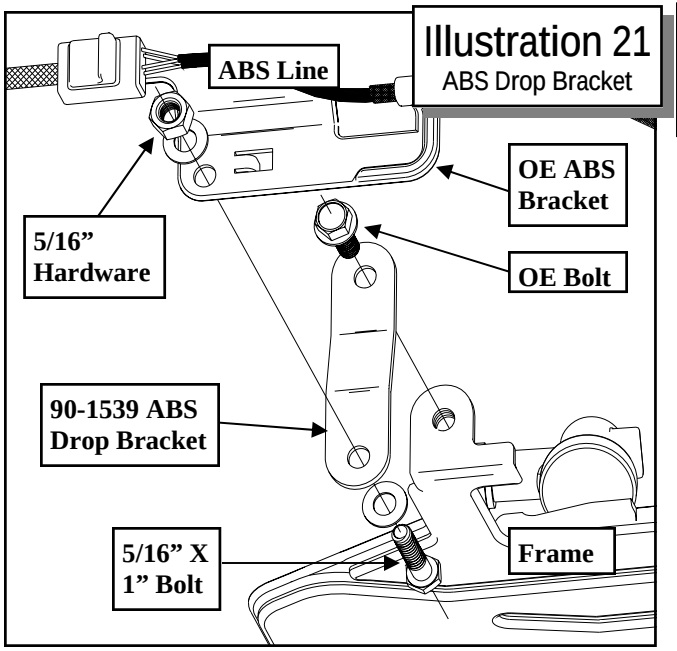

Illustration 21
ABS Drop Bracket

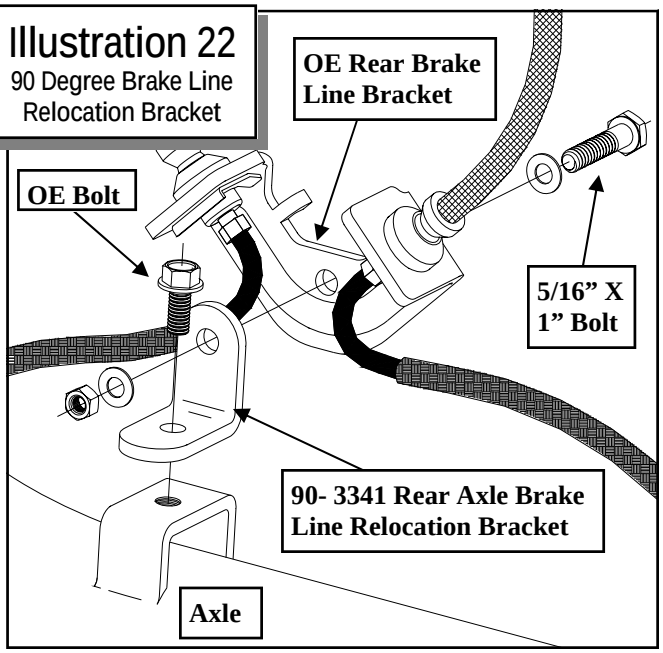

Illustration 22
90 Degree Brake Line Relocation Bracket

NOTE: It will be necessary to cut the center pin bolt to allow for reattachment of the rear OE bump stop.

13. Install the lift block **(95-250),** making sure the pins fit properly into the holes on the spring perch. Use your floor jack to raise the axle to the spring. Make sure the pin on the leaf spring fit into the holes on the new lift block. See ILLUSTRATION 23.

NOTE: These blocks are slightly tapered and the short side of the taper is oriented to the front of the vehicle,

14. Secure the assembly with the **U-bolts (13-90126)** and new hi-nuts and washers from hardware pack **(20-65302)**. Do not torque the **U-bolts** at this time. See ILLUSTRATION 23.

NOTE: Make sure the block sits flush on

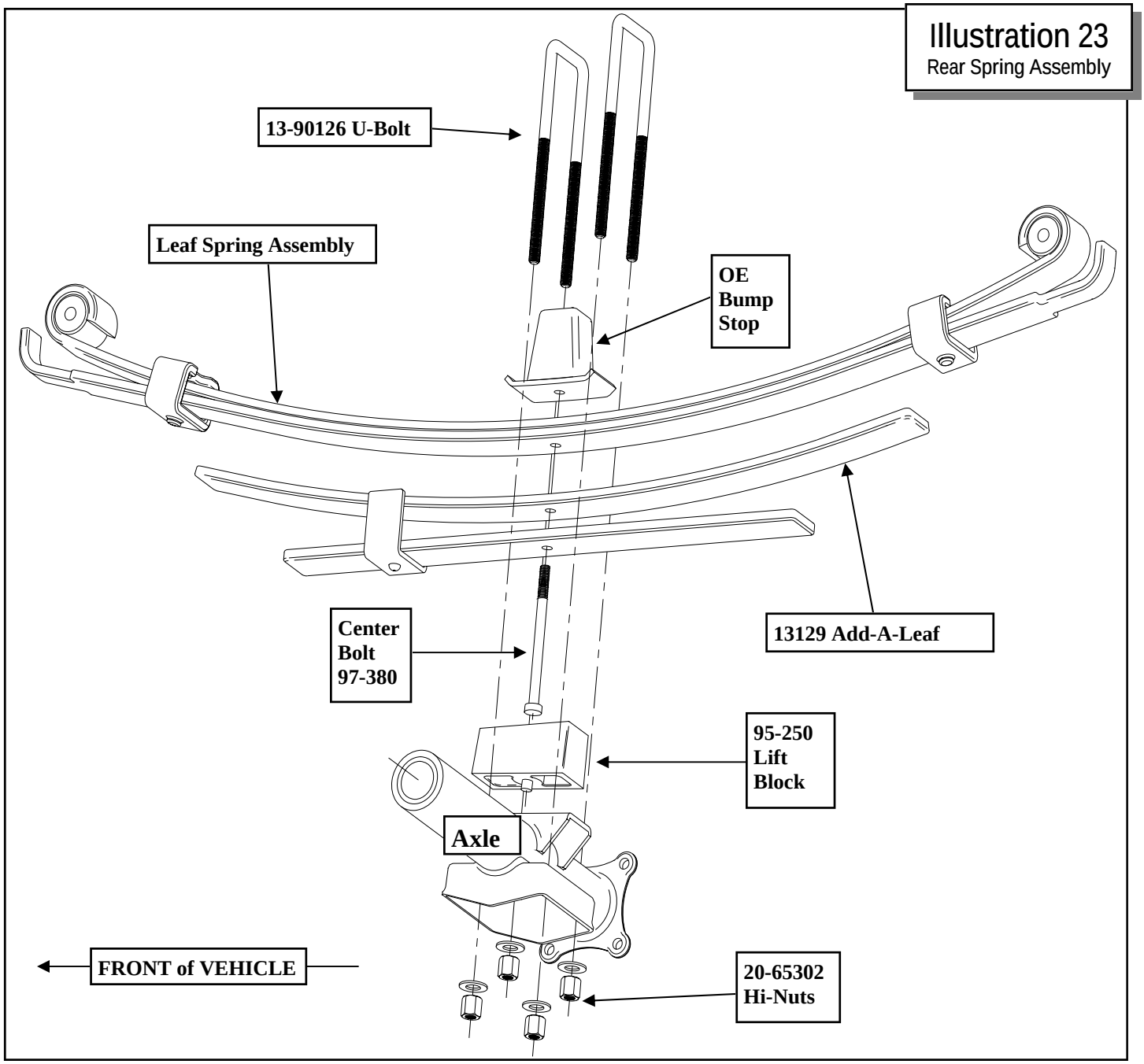

Illustration 23
Rear Spring Assembly

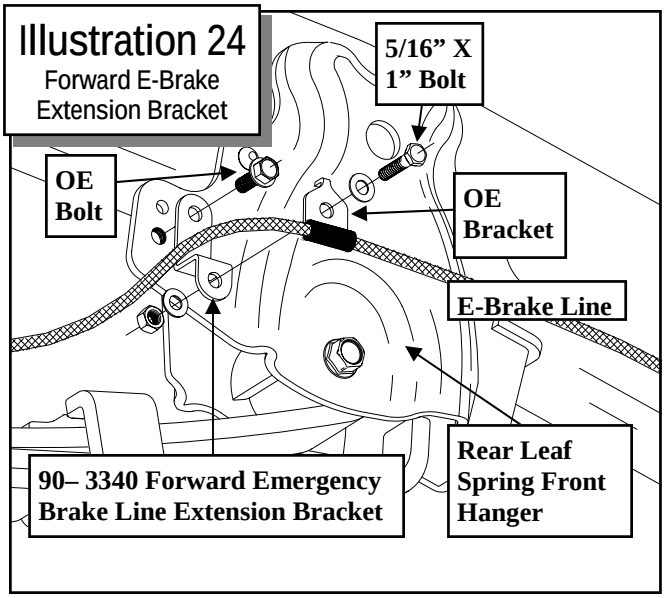

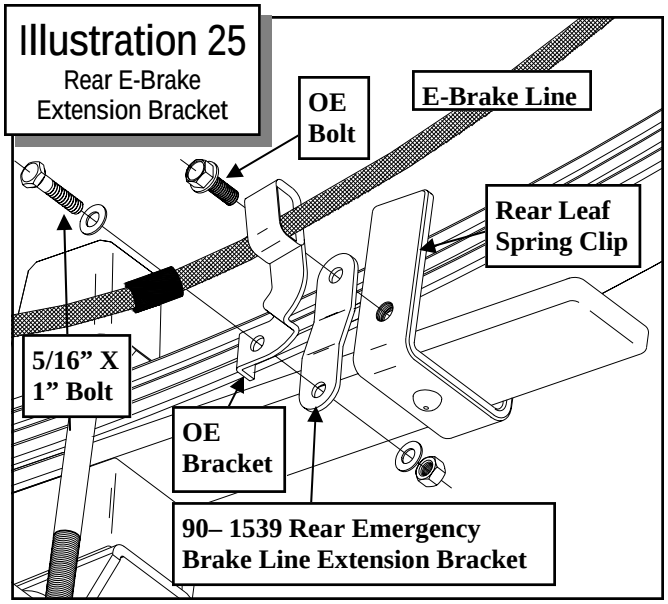

the axle perch.

15. Repeat the installation on the other side of the vehicle.
16. When the installation of the remaining side is complete, torque the **U-bolts** to 85 ft./lbs.
17. Bolt the forward emergency brake cable drop bracket **(90-3340)** using the supplied **5/16" X 1"** bolt and hardware. Secure the drop bracket to the leaf spring front hanger using the previously removed **OE** bolt. See ILLUSTRATION 24.
18. Bolt the rear factory emergency brake cable bracket to the supplied rear emergency brake line drop **(90-1539)** using the supplied **5/16" X 1"** bolt and hardware. Secure the drop bracket to the leaf spring clip using the previously removed **OE** hardware. See ILLUSTRATION 25.
19. Install the new Pro Comp shock absorbers **(MX6142** or **927710 w/shaft end up)** using the previously removed **OE** bolts. Torque this hardware to 74 ft./lbs.
20. Unbolt the rear driveshaft carrier bearing from the frame. Insert the **(2)** carrier bearing spacers **(90-2524)** between the frame and the bearing housing. Secure using the longer supplied **10mm-1.25 X 50mm** bolts and washers.

NOTE: If driveshaft vibration occurs after inserting the 3/4" carrier bearing spacers (90-2524), they may be swapped out for the 1" carrier bearing spacers (90-2309) in order to stop the vibration.

IMPORTANT! If driveline vibration cannot be corrected by installing the supplied carrier bearing spacers, purchase and install transmission crossmember kit (57091 sold separately).

21. Check all hardware at this time to ensure that everything is tight. Check for adequate clearance on all repositioned brake lines and emergency brake cables. Make sure you check with the suspension fully extended, and compressed.
22. Reinstall the wheels and lower the vehicle to the ground. Torque the lug nuts according to the wheel manufacturers recommendations.

NOTES:

⇒ **On completion of the installation, have the suspension and headlights re-aligned.**

⇒ **After 100 miles recheck for proper torque on all newly installed hardware.**

⇒ **Recheck all hardware for tightness after off road use.**

Use this only as a guide for hardware without a called out torque specification in the instruction manual.

Bolt Torque and ID

Decimal System			Metric System			
All Torques in Ft. Lbs. Maximums						
Bolt Size	Grade 5	Grade8	Bolt Size	Class 9.8	Class 10.9	Class 12.9
5/16	15	20	M6	5	9	12
3/8	30	45	M8	18	23	27
7/16	45	60	M10	32	45	50
1/2	65	90	M12	55	75	90
9/16	95	130	M14	85	120	145
5/8	135	175	M16	130	165	210
3/4	185	280	M18	170	240	290

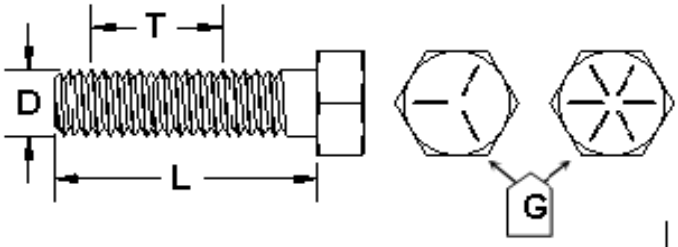

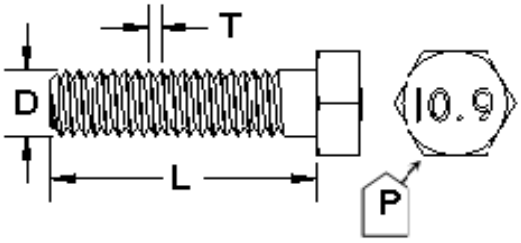

1/2-13x1.75 HHCS

Grade 5 **Grade 8**
(No. of Marks + 2)

M12-1.25x50 HHCS

G = Grade (Bolt Strength)
D = Nominal Diameter (Inches)
T = Thread Count (Threads per Inch)
L = Length (Inches)
X = Description (Hex Head Cap Screw)

P = Property Class (Bolt Strength)
D = Nominal Diameter (Milimeters)
T = Thread Pitch (Thread Width, mm)
L = Length (Millimeters)
X = Description (Hex Head Cap Screw)

Notice to Owner operator, Dealer and Installer:

Vehicles that have been enhanced for off-road performance often have unique handling characteristics due to the higher center of gravity and larger tires. This vehicle may handle, react and stop differently than many passenger cars or unmodified vehicles, both on and off–road. You must drive your vehicle safely! Extreme care should always be taken to prevent vehicle rollover or loss of control, which can result in serious injury or even death. Always avoid sudden sharp turns or abrupt maneuvers and allow more time and distance for braking! Pro Comp reminds you to fasten your seat belts at all times and reduce speed! We will gladly answer any questions concerning the design, function, maintenance and correct use of our products.

Please make sure your Dealer/Installer explains and delivers all warning notices, warranty forms and instruction sheets included with Pro Comp product.

Application listings in this catalog have been carefully fit checked for each model and year denoted. However, Pro Comp reserves the right to update as necessary, without notice, and will not be held responsible for misprints, changes or variations made by vehicle manufacturers. Please call when in question regarding new model year, vehicles not listed by specific body or chassis styles or vehicles not originally distributed in the USA.

Please note that certain mechanical aspects of any suspension lift product may accelerate ordinary wear of original equipment components. Further, installation of certain Pro Comp products may void the vehicle's factory warranty as it pertains to certain covered parts; it is the consumer's responsibility to check with their local dealer for warranty coverage before installation of the lift.

Warranty and Return policy:

Pro Comp warranties its full line of products to be free from defects in workmanship and materials. Pro Comp's obligation under this warranty is limited to repair or replacement, at Pro Comp's option, of the defective product. Any and all costs of removal, installation, freight or incidental or consequential damages are expressly excluded from this warranty. Pro Comp is not responsible for damages and / or warranty of other vehicle parts related or non-related to the installation of Pro Comp product. A consumer who makes the decision to modify his vehicle with aftermarket components of any kind will assume all risk and responsibility for potential damages incurred as a result of their chosen modifications. Warranty coverage does not include consumer opinions regarding ride comfort, fitment and design. Warranty claims can be made directly with Pro Comp or at any factory authorized Pro Comp dealer.

IMPORTANT! To validate the warranty on this purchase please be sure to mail in the warranty card.

Claims not covered under warranty-

- Parts subject to normal wear, this includes bushings, bump stops, ball joints, tie rod ends and heim joints
- Discontinued products at Pro Comp's discretion
- Bent or dented product
- Finish after 90 days
- Leaf or coil springs used without proper bump stops
- Light bulbs
- Products with evident damage caused by abrasion or contact with other items
- Damage caused as a result of not following recommendations or requirements called out in the installation manuals
- Products used in applications other than listed in Pro Comp's catalog
- Components or accessories used in conjunction with other manufacturer's systems
- Tire & Wheel Warranty as per Pro Competition Tire Company policy
- Warranty claims without "Proof of Purchase"
- Pro Comp Pro Runner coil over shocks are considered a serviceable shock with a one-year warranty against leakage only. Rebuild service and replacement parts will be available and sold separately by Pro Comp. Contact Pro Comp for specific service charges.
- Pro Comp accepts no responsibility for any altered product, improper installation, lack of or improper maintenance, or improper use of our products.

E-Mail: tech@explorerprocomp.com
Website: www.explorerprocomp.com
Fax: (619) 216-1474
Ph: (619) 216-1444

PLACE

WARRANTY REGISTRATION NUMBER

HERE: _____